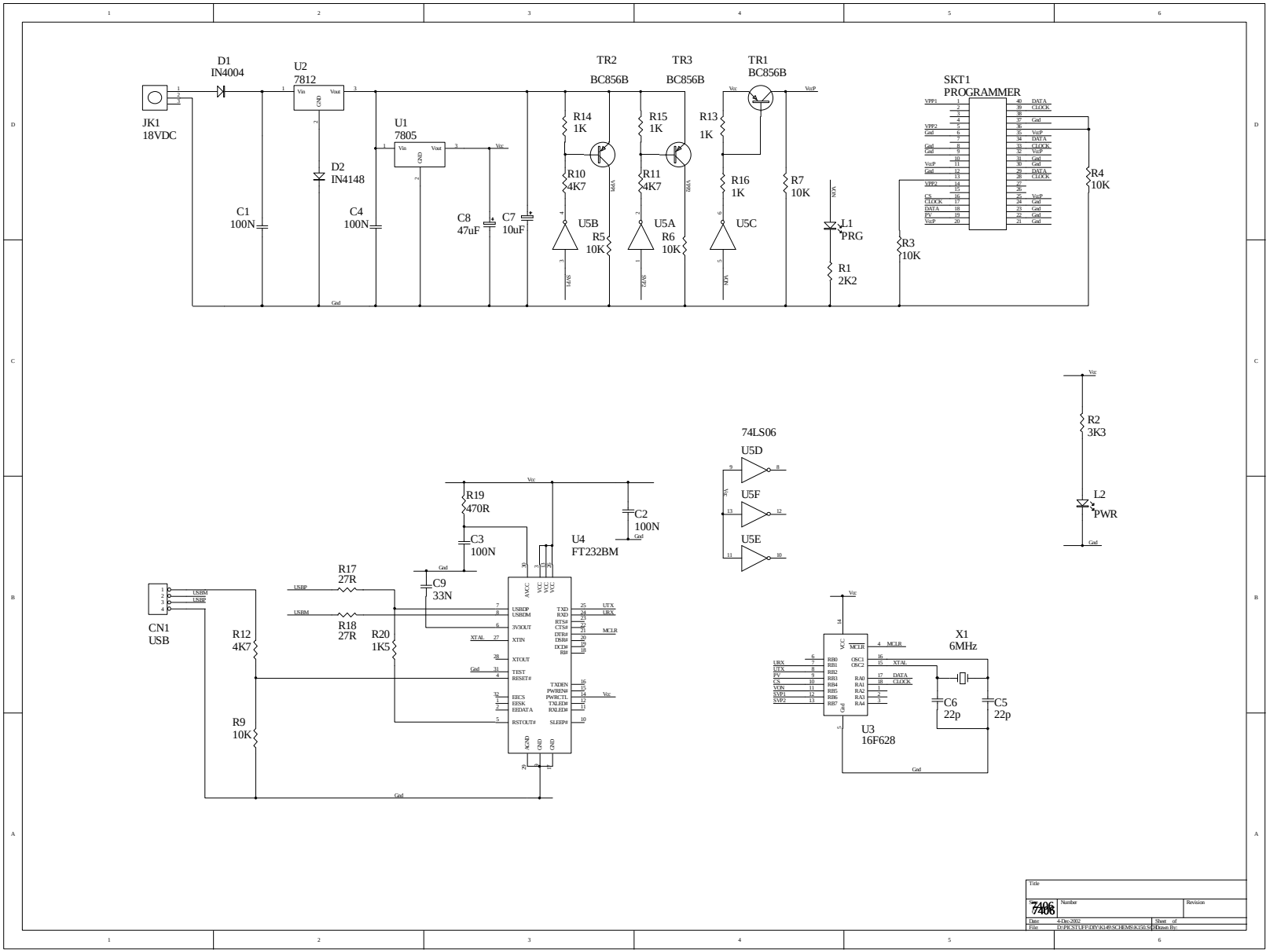
JK1
18VDC
D1
IN4004
U2
7812
Vin
Vout
GND
D2
IN4148
U1
7805
C1
100N
C4
100N
C8
47uF
C7
10uF
Gnd
Vcc
TR2
BC856B
TR3
BC856B
TR1
BC856B
VcpP
R14
1K
R15
1K
R13
1K
R10
4K7
R11
4K7
R16
1K
R7
10K
U5B
U5A
U5C
R5
10K
R6
10K
L1
PRG
R1
2K2
R3
10K
SKT1
PROGRAMMER
R4
10K
R2
3K3
L2
PWR
74LS06
U5D
U5F
U5E
R19
470R
C3
100N
C2
100N
U4
FT232BM
R17
27R
R18
27R
R20
1K5
R12
4K7
R9
10K
C9
33N
CN1
USB
USBM
USBP
AVCC
VCC
USBDP
USBDM
3V3OUT
XTIN
XTOUT
TEST
RESET#
EECS
EESK
EEDATA
RSTOUT#
TXD
RXD
RTS#
CTS#
DTR#
DSR#
DCD#
RI#
TXDEN
PWREN#
PWRCTL
TXLED#
RXLED#
SLEEP#
AGND
GND
UTX
URX
MCLR
XTAL
X1
6MHz
C6
22p
C5
22p
U3
16F628
MCLR
RB0
RB1
RB2
RB3
RB4
RB5
RB6
RB7
OSC1
OSC2
RA0
RA1
RA2
RA3
RA4
DATA
CLOCK
VON
SVP1
SVP2
PV
CS
Title
Number
Revision
Date
4-Dec-2002
Sheet of
File
D:\PICSTUFF\DIY\K149\SCHEMS\K150.SCH
Drawn By:

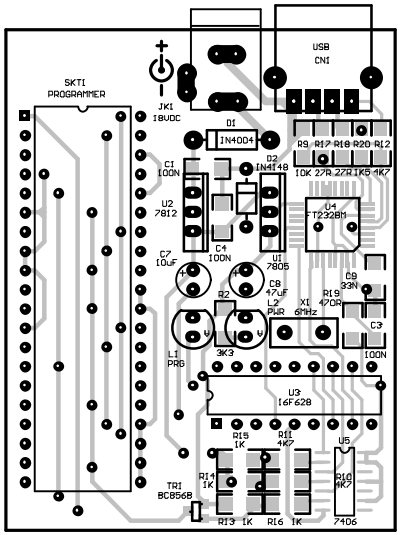
SKT1
PROGRAMMER
JK1
18VDC
USB
CN1
D1
1N4004
D2
1N4148
R9 R17 R18 R20 R12
10K 27R 27R 1K5 4K7
C1
100N
U2
7812
C4
100N
U1
7805
U4
FT232BM
C7
10uF
C8
47uF
C9
33N
R2
3K3
L2
PWR
X1
6MHz
R19
470R
C3
100N
L1
PRG
U3
16F628
R15
1K
R11
4K7
U5
R14
1K
R10
4K7
TR1
BC856B
R13 1K
R16 1K
7406

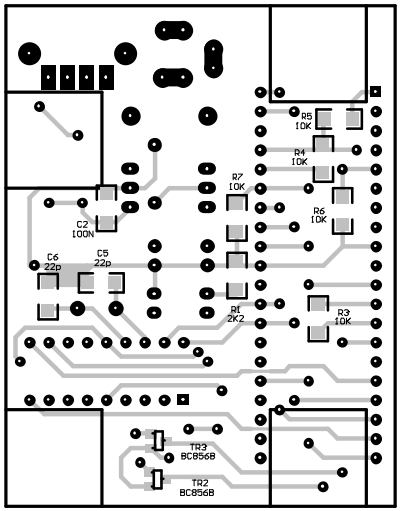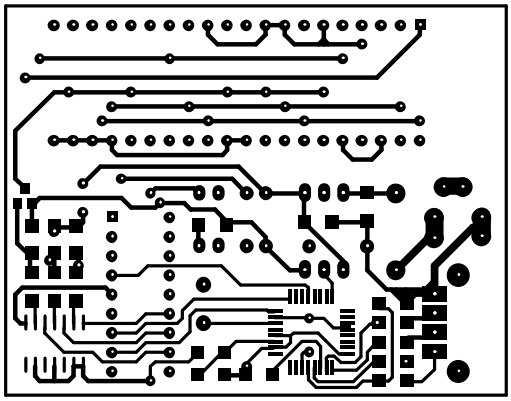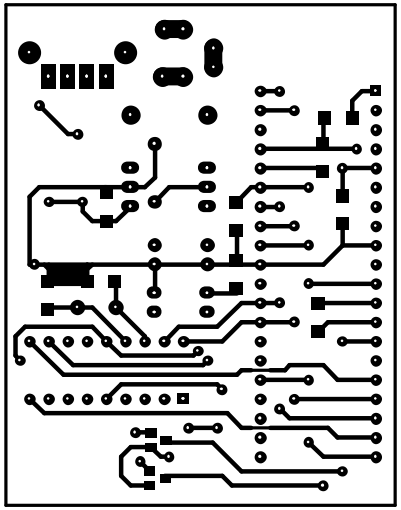
R5
10K
R4
10K
R7
10K
R6
10K
C2
100N
C6
22p
C5
22p
R1
2K2
R3
10K
TR3
BC856B
TR2
BC856B