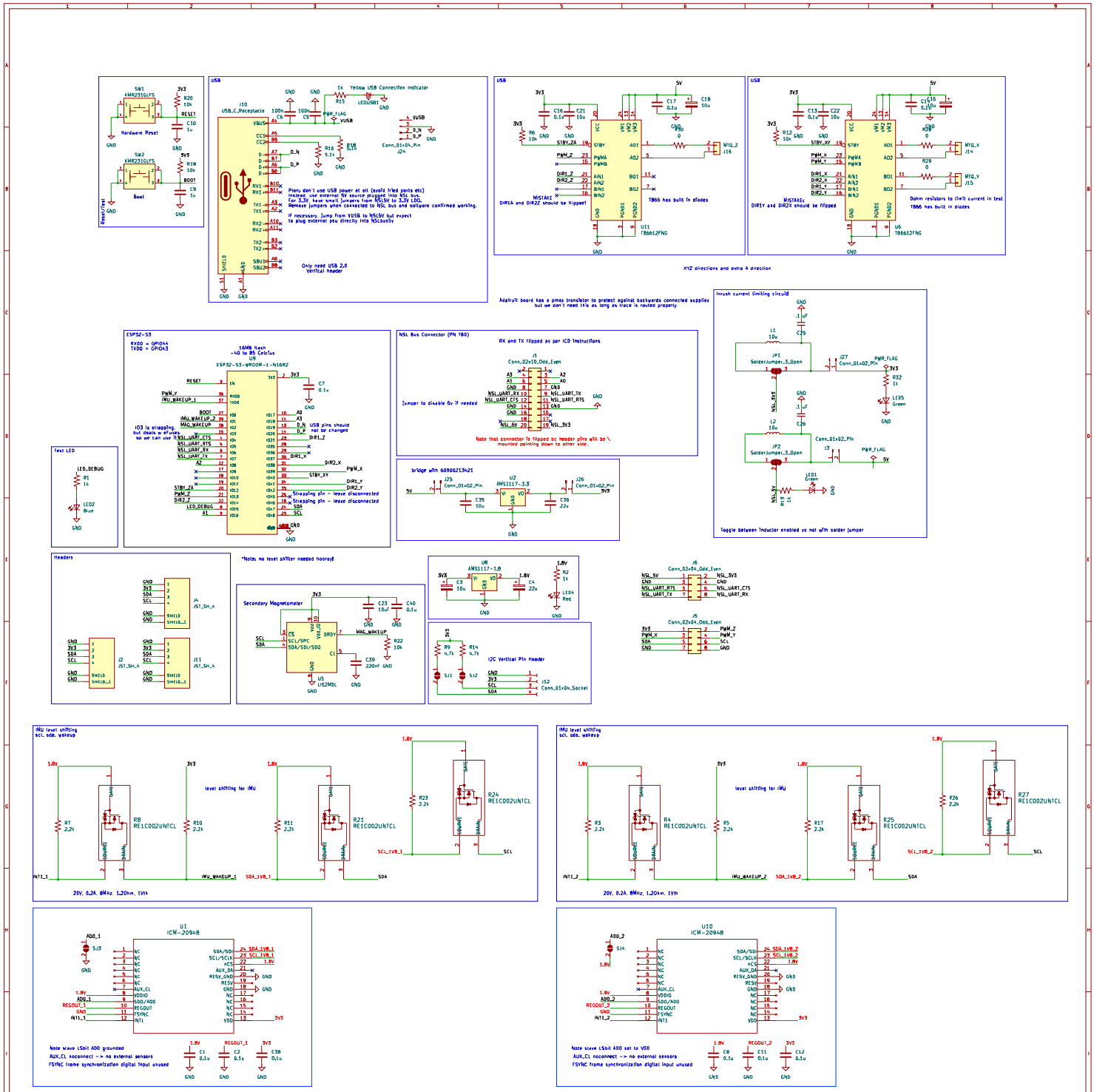

The University of Notre Dame

Infosheet

Sheet: /

File: CHARM_ESP32.kicad_sch

Title: CHARM-Sat

Sizes User	Date: 2024-11-14	Rev:
KiCad E.D.A. 8.0.7		Id: 1/1